# Installation Guidelines: RainScreen System (RS)

**WARNING: FAILURE TO FOLLOW THESE GUIDELINES WILL VOID THE STANDARD WARRANTY.**

**BE SURE TO READ, UNDERSTAND AND FOLLOW ALL GUIDELINES. Manufacturer guidelines may vary depending upon specific application and project conditions. The manufacturer should be contacted with questions regarding conditions which vary from the guidelines set forth. Standard carpentry knowledge is required and good construction practice for health, safety and welfare must be followed when installing Envelope 2000®.**

## TABLE OF CONTENTS



## MAIN STEPS OF THE INSTALLATION PROCESS

☐ **FIRST: UNDERSTAND THE SYSTEM**
Understanding the panel system and determining which attachment option has been specified is imperative for completing a proper installation.

**NOTE:**

**To request a complete Product Manual (which includes recommended SECTION and MOLDING INTERSECTION details), contact the manufacturer.**

☐ **SECOND: PRE-PLAN THE INSTALLATION**
After receiving and properly storing the material, planning the work schedule, grid layout, and material usage should be performed so that the sequence can proceed without significant delays and/or problems.

☐ **THIRD: READ THE GENERAL GUIDELINES**
The general guidelines (i.e. fabrication, sealing, etc.) provide a groundwork for all types installations. Thoroughly read and understand these guidelines before beginning the work sequence.

☐ **FOURTH: COMPLETE THE WORK SEQUENCE**
After reading the instructions set forth in the general guidelines, continue to the appropriate work sequence and complete the installation.

## KEY POINTS FOR A SUCCESSFUL INSTALLATION

- **SAFETY FIRST**
  Proper protection (i.e. gloves, safety glasses) should be worn at all times to prevent injury from sharp edges and/or metal shavings.
- **PROTECT MATERIAL**
  When installation is not in progress, all panel and accessory units must be kept under protective cover and completely dry.
- **ENSURE PROPER FIT**
  Proper fit is very important to the appearance of the system. Allowance for expansion is needed.
- **REMOVE PROTECTIVE FILM**
  Upon completion, the protective film must be removed from the painted surface. Failure to do so promptly may cause difficulty in removal and possibly leave an adhesive residue.

## TECHNICAL ASSISTANCE

Citadel Architectural Products, Inc.
3131-A North Franklin Road
Indianapolis, Indiana 46226
phone: (317) 894-9400
(800) 446-8828
fax: (317) 894-6333
(800) 247-2635
www.citadelap.com
info@citadelap.com

## PRE-INSTALLATION: MATERIAL RECEIVING & INVENTORY

**VISUAL INSPECTION:**
Upon material arrival, all panel units and accessory cartons should be visually inspected to verify that the product is in good condition and free from shipping damage, weather damage or defects.

- ✔ **IS THE PRODUCT IN GOOD CONDITION?**
- ✔ **IS THE PRODUCT FREE FROM DEFECTS?**
- ✔ **IS THE PRODUCT CLEAN AND DRY?**

**NOTE:**

- **Shipping damage and/or packaging issues should be first noted on the bill of lading and then reported to the fabricator.**
- **Should damage occur, the customer is responsible for filing a freight claim with the shipping company WITHIN 24 HOURS from material receipt. Failure to do so may possibly result in forfeit of corrective action.**
- **Any defective material should be reported directly to the fabricator from which the product was purchased.**

**MATERIAL INVENTORY:**
After verifying the condition of the product, inventory units against the packing slip to make sure that all material (including molding and accessory units) is received.

- ✔ **ARE ALL OF THE PANEL UNITS PRESENT?**
- ✔ **...THE MOLDING & ACCESSORY UNITS?**
- ✔ **IS THE PIECE PER UNIT COUNT CORRECT?**

**NOTE:**

**Notify the fabricator from which the product was purchased of any missing or incomplete shipments IMMEDIATELY. Failure to do so may result in forfeit of corrective action.**

## PRE-INSTALLATION: TRANSPORTING & HANDLING

**TRANSPORTING THE MATERIAL:**
Envelope 2000® is packaged from the fabricator covered and secured with metal strapping. If possible, panels should remain in this original packing for transport.

If a forklift or pallet jack is unavailable, panel unit may be broken and carried to storage by hand according to the following guidelines.

**HANDLING THE MATERIAL:**
A strippable protective film is standard on all panels. This film should remain on the product until instructed to take it off (during installation procedure). This strippable film **(FIG. A)** is designed to prevent minor abrasions to the surface. However, panels should still be handled with care to avoid any major dings, dents or scratches.

**FIGURE A.**

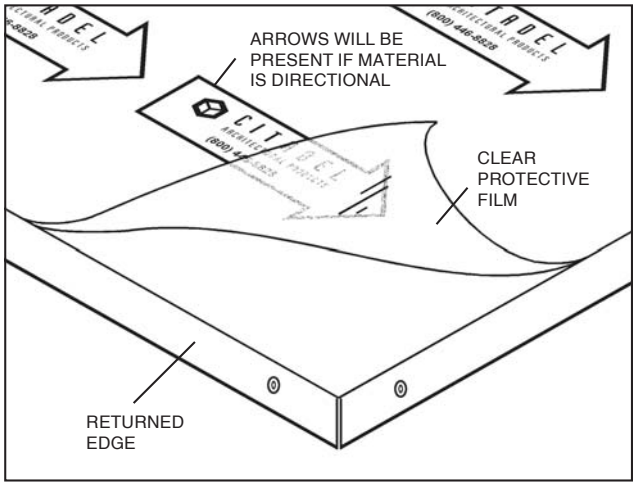


**NOTE:**

- **When handling panels, clean work gloves should be worn at all times to protect from sharp edges and to prevent any smudging of the painted finish.**
- **When removing material from shipping units, DO NOT drag/slide panels across stack underneath. Panels must be lifted up, then away to avoid any permanent damage to the painted surface.**

## PRE-INSTALLATION: STORING THE MATERIAL UNITS

**MATERIAL STORAGE:**
If the units have been broken, material should be restacked, on a skid. Painted surfaces (strippable film side) should be placed face to face and any interleafed foam must be repositioned.

**NOTE:**

**Failure to properly protect material from moisture intrusion may cause damage to the panel surface and/or core. Such damage is NOT covered under the standard warranty.**

If the material has become damp or wet during transportation, the surface should be wiped dry before stacking to prevent any type of corrosion. Once the stacking is completed (or if the original packaging is still intact), the units must be covered with a waterproof covering.

All units must be kept in a dry, well-ventilated area away from exposure to the elements and/or any other installations which may cause damage to the product.

## PRE-INSTALLATION: SCHEDULING & GRID LAYOUT

**COORDINATION OF WORK:**
In accordance with good construction practice, schedule the work to coordinate with other trades so that installation can proceed without significant interference/delay.

**NOTE:**

**Once begun, work should not be delayed for long periods of time at a point which might cause damage to the product if acted upon by external conditions (i.e. rain, snow, long periods of exposure to the sun).**

**DETERMINING THE GRID:**
Before beginning the installation procedure, it is important to plan the overall layout of the installation. Architectural drawings should be consulted to determine the correct grid, where applicable.

**CALCULATING MATERIAL USAGE:**
After identifying/determining the grid, begin to verify that the correct amount of material has been ordered for your specific application. Since material takeoffs and resulting quantities are based upon the grid layout, installing the material in another pattern may result in shortages.

**FIGURE B.**

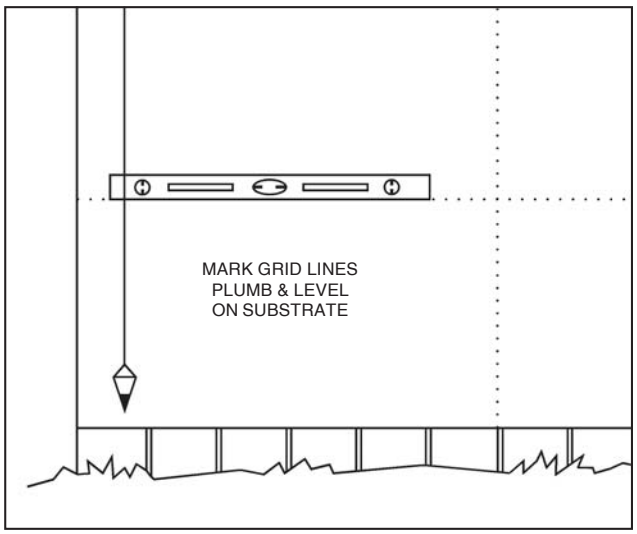


**ALIGNING & MARKING THE GRID:**
Using the grid pattern derived, establish a base point in the lowermost left corner of the elevation (typically). Using a chalk line, level, and a plumb bob, mark the complete grid **(FIG. B)** on the substrate. Doing so will allow for any necessary adjustment to be made prior to installation.

All surfaces of the substrate should be free from any obstructions and/or projections which might interfere with panel application. Note areas where shims may be required to bring the panel system into a plumb, level, and consistent plane.

## GENERAL WORK: LIMITATIONS OF THE PANEL SYSTEM

**USES & APPLICATIONS:**
Envelope 2000® is intended for use as a non-structural wall panel. It may also be used in other applications where the slope does not exceed 25° **(FIG. C)** past vertical.

**FIGURE C.**

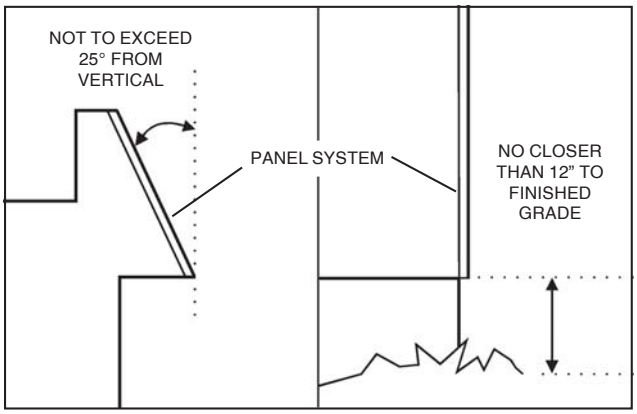


Also, the system must be kept a minimum of 12" away from the finished landscaping grade. Other environmental and application limitations may apply. Refer to the *Product Warranty*.

## GENERAL WORK: EXTRUSION POSITIONING

Envelope 2000® RS is a fabricated system that should arrive at the jobsite with all of the extrusions necessary for installation (some will be pre-mounted to the formed panels and others will be applied in-the-field).

An identification system of some type should also be present to locate the position of a particular panel within the elevation. Therefore, as an installer, it is important that you become familiar with the different types of mounting extrusions as well as how they will be used during installation **(FIG. D)**.

| NOTE: |
| --- |
| **Should any formed panels have improperly mounted and/or missing extrusions, notify the fabricator immediately.** |

**FIGURE D.**

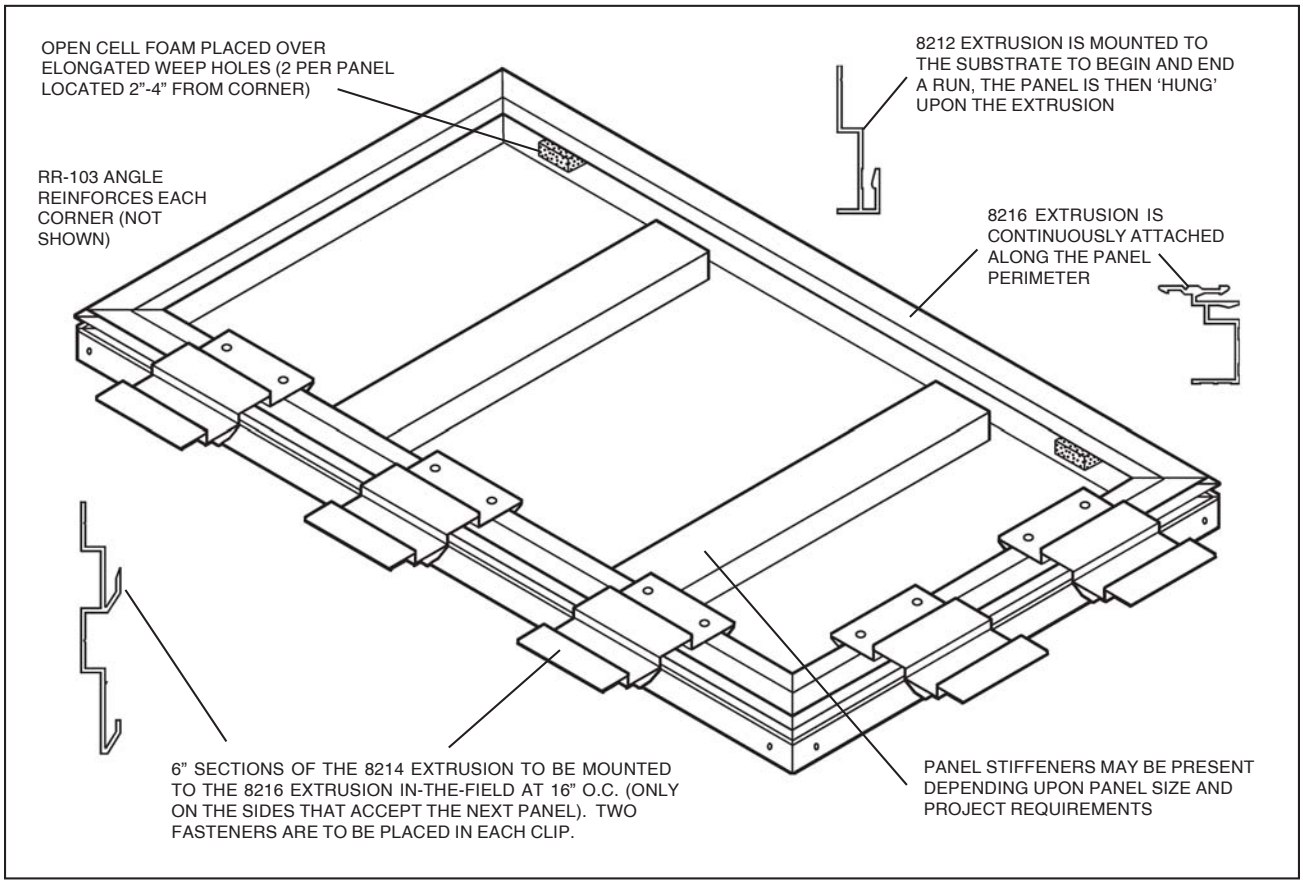

In general, each panel will be mechanically fastened to the substrate on at least two sides, using 6" sections of the 8214 extrusion attached to the 8216 extrusion on the back of the panel **(FIG. E)**, with the remainder of the sides 'floating' in an extrusion mounted to the substrate (8212 extrusion).

**FIGURE E.**

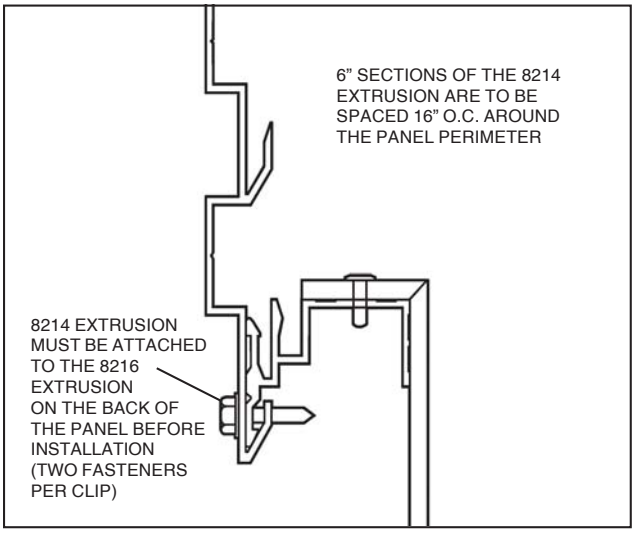


This 'inter-connection' of the panels allows for movement within the wall system to allow for expansion/contraction. The position of the panel within the elevation will determine the number of mechanically fastened sides and the number of 'floating' sides.

Being a progressive system, the lead side(s) are usually slid over the previous panel and 'float', while the trailing side(s) are then mechanically fastened to the substrate.

Also on the back of the formed panel, the returned edges are reinforced with a small aluminum angle riveted to each corner. A stiffener may also be present (depending upon design requirements and panel size).

Along with the aluminum extrusions, small sections of open cell foam should be placed at each weep hole location (at the bottom edge of the formed 'pan') to serve as an insect screen.

## GENERAL WORK: PROPER SEALANT APPLICATION

As a rainscreen principle system, Envelope 2000® RS is an exterior cladding system designed to allow incidental water to enter the system and exit through weep holes. The RS System will always be applied over a moisture/air infiltration barrier (i.e. Tyvek®). However, whenever the system abutts a dissimilar material, you must allow for a sealant joint. Therefore, it is imperative that the following guidelines be followed accurately to ensure the integrity of the system against moisture intrusion.

**SELECTING THE RIGHT SEALANT:**
In order for the proper bond to be created between the sealant and dissimilar materials, be sure to use only the sealant recommended by the manufacturer (i.e. Tremco® Spectrem® 2, Dow Corning™ 795, or GE Silpruf™). The use of other sealants may require additional steps (such as priming of materials) or cause the installation to fail due to poor weatherability, staining and/or lack of adequate bonding.

**SEALANT APPLICATION:**
In general, sealant should be liberally applied wherever the system abutts dissimilar material. All such joints should have a closed cell backer rod placed into the joint (set back approximately 1/2 the width of the joint) before sealant application **(FIG. F)**.

**FIGURE F.**

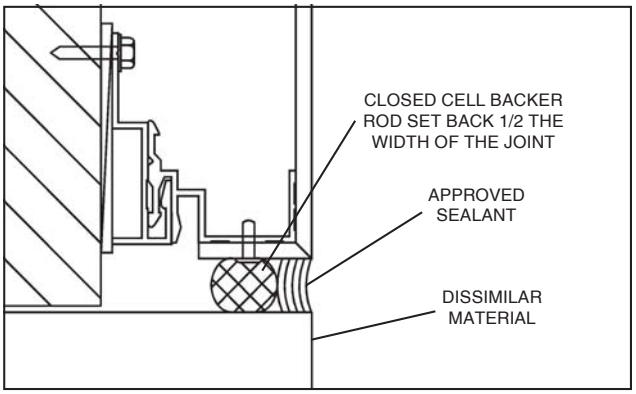


## GENERAL WORK: THE ACCENT STRIPS

A unique feature of the Envelope 2000® RS system is the presence of accent (or baffle) strips within each joint. Using the accent strips allows the panel joint to range

**FIGURE G.**

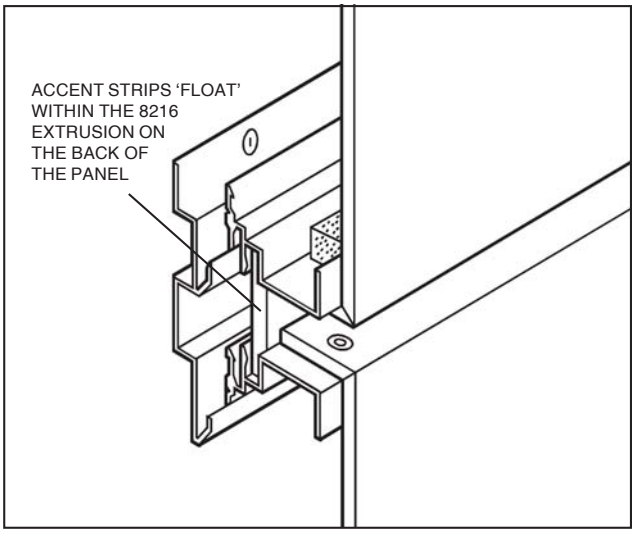

from 1/2" (typical) to 12". These strips are made from flat pieces of panel and float within the perimeter extrusion (8216) on the back of the formed 'pan' **(FIG. G)**.

When installing the panel system, vertical accent strips pass through horizontals. Also, no splices should occur within the panel intersection **(FIG. H)**.

**FIGURE H.**

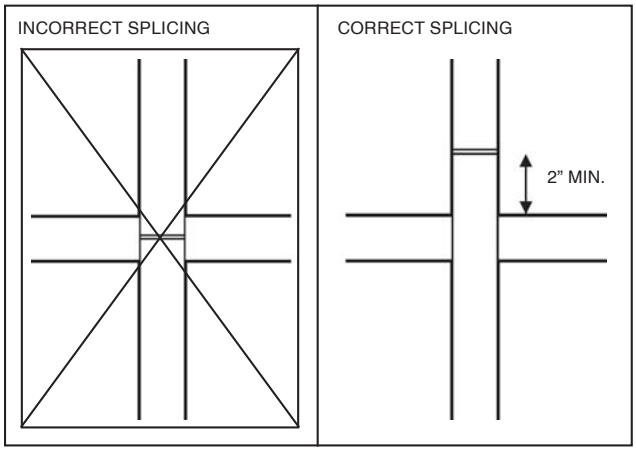


When cutting the strip(s) to size, approximately 1" should be added to the desired joint size to obtain the correct strip width. For example, a 1/2" joint would require the accent strips to be cut to a 1-1/2" width. The protective film should always be completely removed before installing the accent strip.

## GENERAL WORK: THE PROTECTIVE FILM

When directed to do so *(see Work Sequence)*, the protective film must be removed from the panel surface. For ease of removal, pull the film back against itself in the same plane as the panel.

**NOTE:**

**Failure to remove the protective film promptly after installation (or exposure to long periods of sunlight) may cause difficulties in removal and possibly leave an adhesive residue.**

## MAINTENANCE OF THE PANEL FINISH

**REPAIR/TOUCH UP:**
Any minor scratches or dings which may occur during installation can be repaired using touch-up paint available from the fabricator. Repainting of large areas with the touch-up paint is not recommended. Finish characteristics of the repainted surface may vary from the prepainted aluminum.

**MAINTENANCE:**
Panels should be incorporated into an overall building washing/maintenance schedule and cleaned in accordance with AAMA 610.1, Voluntary Guide Specification for Cleaning and Maintenance of Painted Aluminum Extrusions and Curtain Wall Panels.

In general, panels may be cleaned using warm water and a mild detergrent (if necessary). For more aggressive materials, a gentle brushing/scrubbing action may be required. Abrasive detergents and/or harsh solvents should not be used.

# WORK SEQUENCE:
# RAINSCREEN SYSTEM (RS)

**STOP! READ BEFORE PROCEEDING WITH WORK SEQUENCE**

**These guidelines are set forth to show the intent and general sequence of installation. The procedure for each individual application and condition may vary. For special conditions or for those not discussed (parapet, dissimilar material, etc.), refer to the General Work Guidelines, Typical Details or contact the manufacturer.**

## INSTALLATION SPECIFICATIONS:

**System Type:**
- Non-Structural, 'rainscreen principle' System

**Work Flow:**
- Progressive, moving up and across the elevation beginning at a bottom corner (typical).

**Possible Substrates:**
- Nailable Substrate with Moisture Barrier
- Non-Nailable Substrate with Moisture Barrier (fastened directly to studs)

**Expansion/Contraction Spacing:**
- Typical joint spacing is 1/2"-12" between abutting panels.

**Type Of Fastener (for mounting extrusions):**
- #10 TEK Screw, 1-1/2" long, hex head.

**Fastening Schedule:**
- Attachment Extrusions:
  Every 16" along length of molding.

**Open Cell Foam:**
- Placed by the fabricator into weep holes to prevent debris/insects from getting into the cladding cavity. Weep holes should be facing downward.

**Accent Strips:**
- Placed in between mounting extrusions to close the cladding cavity, range in size from 1-1/2" for 1/2" joints to 13" for 12" joints.

### ☐ STEP 1: ATTACHING THE STARTER EXTRUSIONS TO THE SUBSTRATE

Since the system is progressive, installation generally starts in the lowermost corner of the elevation.

Once the appropriate flashing has been installed, set spacer blocks (1/2" joint typical) on the flashing to use as a guideline for setting the first panel.

Begin by peeling the protective film back from the returned edges of the panel. Then, attach the starter extrusion (8212) along the bottom & left side to the substrate, shimming where required **(FIG. 1)**.

**FIGURE 1.**

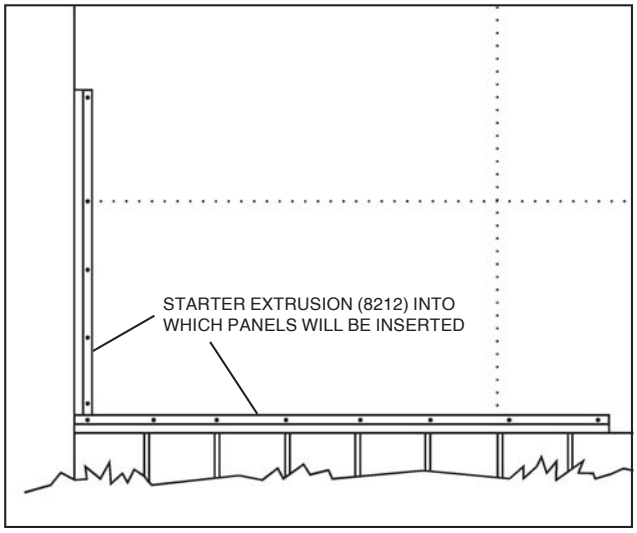

### ☐ STEP 2: INSTALLING THE FIRST PANEL

Begin by fastening several 6” lengths of the hanger extrusion (8214), located every 16” o.c., onto the top and right sides of the panel. The ‘clips’ should be slid onto the perimeter extrusion (8216) located on the back of the panel and then fastened using a minimum of two (2), #12 TEK screws *(see General Work)*.

Next, slide the edges of the panel onto the starter extrusions (previously attached in **STEP 1)**. Place the lower end in first, then slide the panel to the left to fully engage the extrusions.

Fasten the ‘hanger clips’ on the opposite sides (top and right) to the substrate **(FIG. 2)**.

Completely remove the protective film.

**FIGURE 2.**

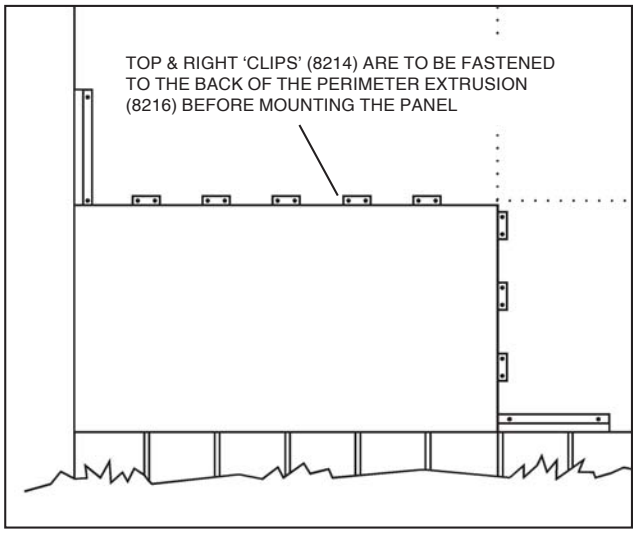


### ☐ STEP 3: PLACING THE ACCENT STRIPS

At each joint, an accent strip (small section of panel) is to be placed **(FIG. 3)** before mounting the next panel in the sequence. Verticals should pass through horizontals.

The accent strips are slid into the slot on the perimeter extrusion (8216). The strips are not fastened, but permitted to ‘float’ within the extrusion.

Remove the protective film completely from the accent strip before placing them.

**FIGURE 3.**

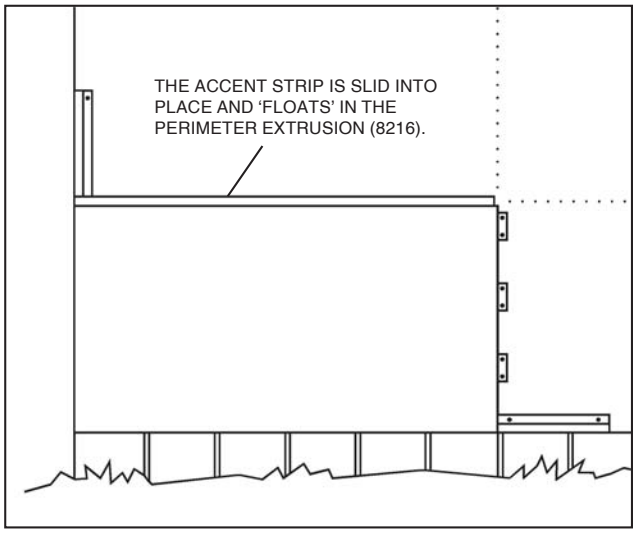


### ☐ STEP 4: INSTALLING THE ABUTTING PANELS

Begin by placing spacer blocks (equal to the joint width) along the panel edge to create the proper spacing. Then prepare the panel for installation (repeating **STEP 2**) by attaching the hanger clips to the back of the panel.

Slide the next panel in the sequence over the edge of the accent strip and fasten the opposite side of the panel to the substrate **(FIG. 4)**.

Then completely remove the protective film from the installed panel(s).

Complete the installation by moving vertically in the grid. Upon completion of the first column, move again to the bottom of the elevation and begin at the next column.

**FIGURE 4.**

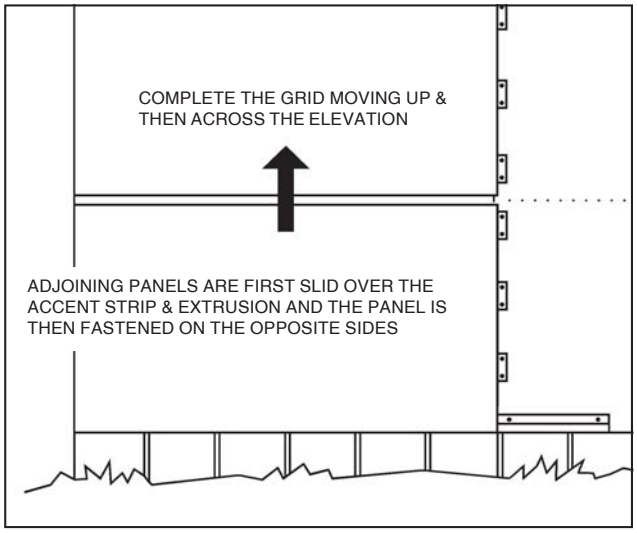

## ONE PIECE ALUMINUM ATTACHMENT EXTRUSIONS

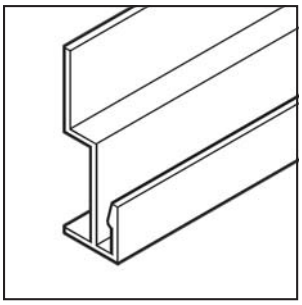

**8212 EXTRUSION**

Height: 2-1/8” (54mm)
Width: 1/2” (13mm)
Length: 12’-6” (3810mm)

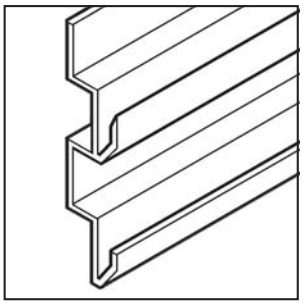

**8214 EXTRUSION**

Height: 3-1/2” (89mm)
Width: 1/2” (13mm)
Length: 12’-6” (3810mm)

Note: Angle cut to 6” sections for use on formed panels.

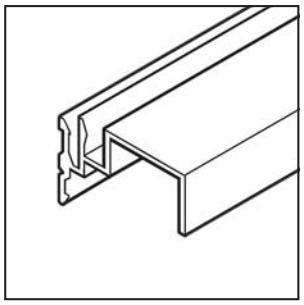

**8216 EXTRUSION**

Height: 1-1/8” (29mm)
Width: 1-3/8” (35mm)
Length: 12’-6” (3810mm)

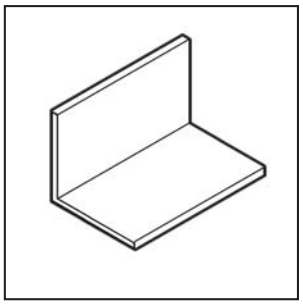

**RR-103 PANEL CLIP**

Height: 1-1/2” (38mm)
Width: 1” (25mm)
Length: 12’-6” (3810mm)

Note: Angle cut to smaller peices (shown) for use on formed panels.

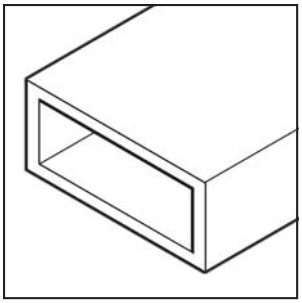

**STIFFENER TUBE**

Height: 1” (25mm)
Width: 2” (51mm)
Length: 12’-6” (3810mm)

| Item # | Description | Application |
|---|---|---|
| **5007 WEEP BAFFLE** | 7/8” x 1” x 152’ roll | Used with the Envelope 2000® RS system, this baffle prevents insects from entering the cladding cavity through the weepholes in the panel. |